BOSNIA AND HERZEGOVINA

Post: Ortiješ bb, P.P. 133
88000 Mostar
Bosnia and Herzegovina

Phone: +387 36 446 224
Fax: +387 36 446 261
Email: aisbih@bhansa.gov.ba

AIC A 001/2022
21-APR-2022

VISUAL FLIGHT RULES (VFR) IN BOSNIA AND HERZEGOVINA

1. INTRODUCTION

Aeronautical Information Circular is intended to provide suitable overview of basic rules, requirements and method of service provision in accordance with visual flight rules in the airspace of Bosnia and Herzegovina. AIC can by no means replace documents with pre-flight information and other information necessary for orderly Flight planning. Regulations used in air traffic are given in the Aviation Law of Bosnia and Herzegovina.The Aviation Law of Bosnia and Herzegovina, by-laws and rules available in English and the official languages of Bosnia and Herzegovina can be found at the following address: www.bhdca.gov.ba. Illustrations are not intended to be used for the purpose of navigation but are attached for the sake of better understanding. The abbreviations used correspond to the standard ones customary in aviation.

2. GENERAL INFORMATION

2.1 Legislation

Flights considered in this AIC shall be carried out in conformity with the regulations of the International Civil Aviation Organization (ICAO) and Annexes to the Convention on International Civil Aviation.The AIC does not address military air force of B&H and European Stabilization Forces (EUFOR) flights, and they are therefore not subject to the limitations stated therein.

2.2 Pre-flight and flight information and briefing

Available aeronautical publications and maps necessary to conduct VFR flights can be obtained from the following address:

Post:	Ministry of Communications and Transport Directorate of Civil Aviation V kozarske brigade 18 78000 Banja Luka Bosnia and Herzegovina
Phone:	+387 51 921 222
Fax:	+387 51 921 520
E-mail:	bhdca@bhdca.gov.ba
URL:	http://www.bhdca.gov.ba

Detailed information and specific requirements necessary for the conduct of VFR flights can be obtained at ARO at the following aerodromes.

Office	Hours of Operation	Telephone	Telefax	AFTN
ARO Banja Luka	H24	+387 51 337 537	+387 51 337 538	LQBKZPZX
ARO Sarajevo	see NOTAM	+387 33 779 150	+387 33 546 743	LQSAZPZX
ARO Mostar	see NOTAM	+387 36 352 209	+387 36 352 208	LQMOZPZX
ARO Tuzla	see NOTAM	+387 35 745 530	+387 35 745 532	LQTZZPZX

Aeronautical information is available in English and in one of the official languages of Bosnia and Herzegovina, and can be obtained:

in writing

by phone

Flight plans are also submitted to the above mentioned ARO.

3. FLIGHT PLANNING

No entry/exit special permission (diplo clearance) to operate within Bosnia and Herzegovina for General Aviation is required for aircraft registered in an ICAO member state with seat configuration of six (6) or less, including pilot seats. Flight plan will suffice. International arrivals to/departures from uncontrolled aerodromes and airfields in Bosnia and Herzegovina are approved only upon intermediate landing at the suitable international aerodrome with organized customs and immigration control.
If customs and passport services are provided at an uncontrolled aerodrome or airfield, international arrivals/ departures may be conducted without obligation to make intermediate landing at a suitable international aerodrome. A flight plan shall be filed for the following flights:

- all VFR flight in a controlled airspace;
- all VFR flights departing from or arriving at a controlled aerodrome;
- all VFR flights living / entering Bosnia and Herzegovina airspace;
- all VFR flights through restricted and dangerous zones while they are active if so specifically regulated at establishment such zones/areas;
- all night flights.

RCC Banja Luka	Hours of Operation	Telephone	Telefax	AFTN
	H24	+387 1262 +387 51 337 564 +387 61 260 831	+387 351 337 566	LQSBYCYX LQSBYCYX

A Flight plan shall be filed no later than 60 minutes prior to EOBT.
In the event of delay in departure of 30 minutes or more for a flight for which a flight plan has been submitted, the flight plan shall be changed and a new one will be submitted after the cancellation of the old flight plan.
VFR and VFR/IFR flight plan shall be filed in the ARO at the departure aerodrome.
In case of absence or outside operation hours of ARO at the departure aerodrome, a flight plan shall be submitted to the nearest ARO in operation.
Flight plan may be submitted by telephone or telefax by using an appropriate FPL form.
If flight plan is submitted via telefax, submitter of the flight plan shall:

- after the transmission of the flight plan, immediately confirm by telephone the flight plan, otherwise the flight plan will not be processed;
- use a prescribed or a computer FPL form to file a flight plan;
- legibly and without omissions fill in the FPL form;
- enclose a telephone/telefax contact number.

When a flight plan is submitted by telephone, the ICAO sequence of items in the flight plan form shall be strictly followed. Submitter of the flight plan is responsible for:

- completeness and accuracy of data;
- acquisition of pre-flight information and necessary ATC approvals;
- check of the flight feasibility;
- complete addressing and transmission.

A flight plan may also be submitted in flight if so required by special circumstances, unknown before departure,

except for flights which continue on after intermediate landing or for flights outside the borders of Bosnia and Herzegovina.
A pilot may request, during flight, from a relevant ATC to cancel the IFR flight plan and to continue flight in VMC. The relevant ATC will cancel the IFR flight plan and issue clearance to continue flight by VFR only if it is certain that the rest of the flight will be conducted in the VMC.
For all flights for which the flight plan has been submitted, and the departure is performed from uncontrolled aerodrome or airfields, an authorized person shall immediately submit departure message to the ARO. The departure message may be submitted to the relevant ATC, immediately after departure, also by the pilot via an appropriate radio communication procedure.
A take-off/departure report shall contain the following information:

- call sign of the aircraft;
- airport of departure;
- take-off time;
- airport of arrival;
- estimated time of arrival.

For flights for which a flight plan has been submitted, which are to land at an uncontrolled airport or airfield, the pilot shall submit an arrival message to the relevant ATC.The arrival message may be submitted also via radio communication prior to landing at an uncontrolled aerodrome or airfield. The arrival message shall be forwarded by the ATC that was last contacted by the pilot. If radio communication cannot be established, the message shall be forwarded by telephone or telefax.
For flights from/to controlled aerodromes, the TWR shall automatically forward this message by telephone or telefax to an ARO.
An arrival message shall contain the following information:

- call sign of the aircraft;
- airport of arrival;
- time of arrival;
- estimated time of landing.

For all flights for which a flight plan has been submitted, which are to land at an uncontrolled aerodrome or airfield, the pilot or an authorized person shall, immediately after the landing, submit the actual time of landing to the relevant ARO. If for some reason the landing has not been completed at the planned aerodrome or airfield, the pilot shall inform the relevant ATS of the incurred changes in the flight plan, and of changing to another aerodrome or airfield of landing.

4. AIRSPACE STRUCTURE

The airspace of Bosnia and Herzegovina is classified in accordance with ICAO guidelines.

4.1 Airspace classes in Bosnia and Herzegovina

Within Bosnia and Herzegovina, the airspace is classified as C, D, E (*controlled) and G (*uncontrolled). Airspace classes A, B and F have not been established.

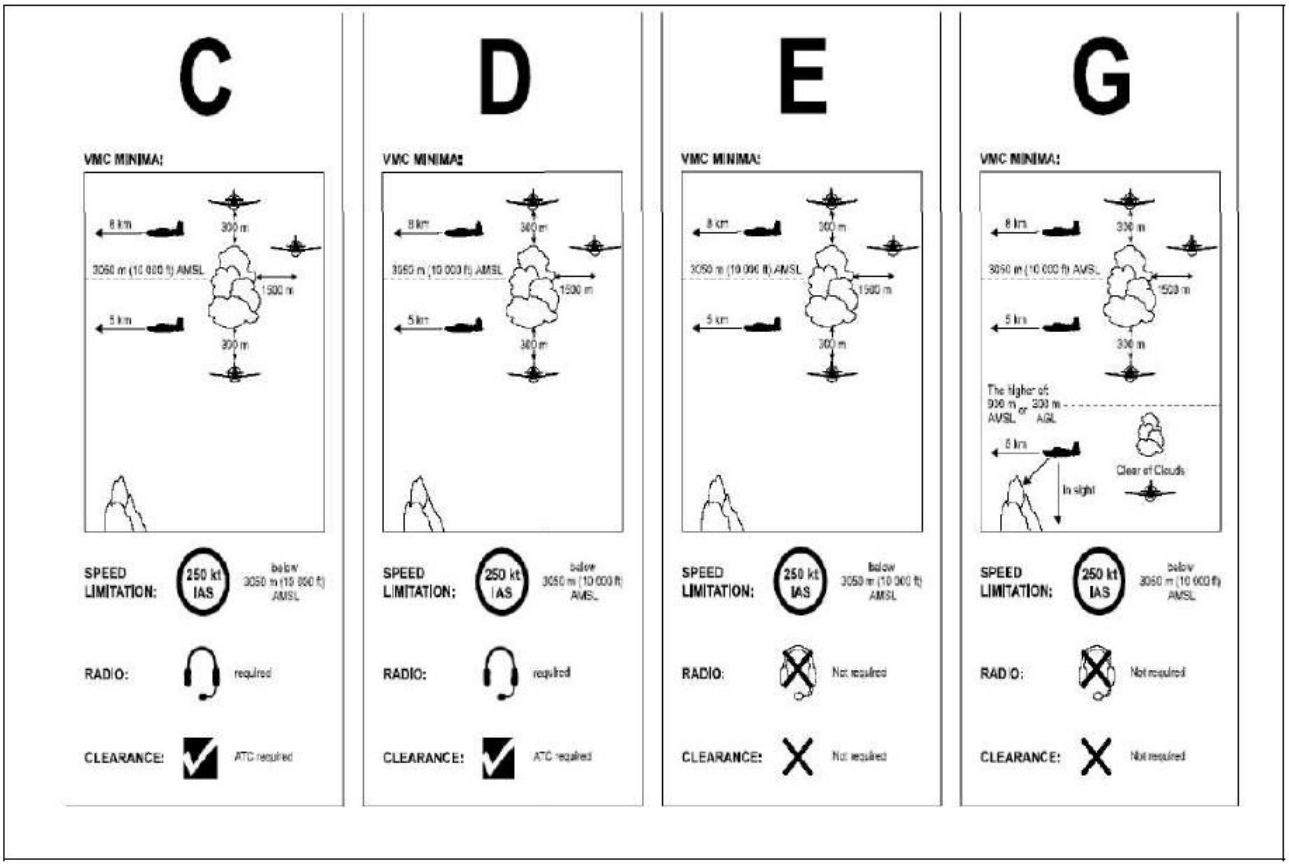

Note: See document "Ministerial Order on Rules of Air" ("Official Gazette No 52/13), Article 50., (3), (4)

Aircraft, helicopters, motor sailboats, sailboats, airship and unnamed free balloon with crew must be equipped with one VHF transceiver in the frequency range from 117,975 MHz to 137 MHz, which are required to performed planned flight (VFR lights).Aircraft flying above flight level 195 will be equipped with 8,33 kHz frequency transceivers. Communication equipment is mandatory for flying in the airspace class C, D, E and G and for flying at night.
In addition to communication equipment, aircraft flying according to visual flight rules, and flying takes place in controlled airspace class C, and at night in TMA Sarajevo, shall be equipped with one SSR transponder.
Aircraft performing VFR flights in controlled airspace predetermined by the air traffic control service shall be equipped with navigation and communication equipment in accordance with Article 50. of Ministerial order on Rules of Air. Such flights shall be continuously listened to and monitored by the radio and, at the request of the air traffic control service, report on the position of the aircraft.

4.2 Airspace classes concept

4.2.1 Controlled airspace

Controlled airspace consists of:

- Terminal control areas (TMA);
- Control zones (CTR).

The following airspace has been notified as Class "C" airspace:

- Sarajevo FIR from 9500 ft MSL to FL 660, outside Terminal control areas (TMAs).

The following airspace has been notified as class "D" airspace:

- CTR Banja Luka: GND - 5500 FT AMSL
- CTR Sarajevo: GND: 6500 FT AMSL

- CTR Mostar: GND - 6500 FT AMSL
- CTR Tuzla: GND - 5500 FT AMSL

The following airspace has been notified as Class "E" airspace:

- TMA Banja Luka: 1000 FT AGL - FL 125, outside CTR Banja Luka;
- TMA Sarajevo: 1000 FT AGL - FL 205, outside CTR Sarajevo;
- TMA Mostar: 1500 FT AGL - FL 145, outside CTR Mostar
- TMA Tuzla: 1500 FT- FL 145, outside CTR Tuzla.

4.2.2 Uncontrolled airspace

Class G airspace outside TMAs, CTRs and CTAs from GND to 10000 FT AMSL.
Note: Controlled and uncontrolled airspace used as generic term.

5. VFR OPERATIONAL PROCEDURES

5.1 General rules

VFR flights are conducted in accordance with airspace classification (Appendix 1). Within FIR Sarajevo the following VFR flights are permitted:

- during the hours of daylight;
- during night (NVFR);
- up to FL 200;
- in VMC;
- special VFR (bellow VMC, conditions apply);
- within and outside of the controlled airspace;
- with cruising levels according to the Annex 2, Appendix 3.

"Day" is defined as the period from half an hour before sunrise (SR-30) to half an hour after sunset (SS+30). GAT VFR flights at and below FL 195 shall be conducted:

- in the reserved airspace (temporary reserved airspace or its equivalent);
- in accordance with ATC clearance;
- in accordance with a special arrangement made with the relevant ATC;
- in permanently or temporarily established "corridors" for VFR flights (VFR routes).

Note: There are published VFR chart with recommended VFR routes (corridors) in B&H without "names". GAT VFR flights at altitudes above FL 195 including FL 285 shall be conducted:

- in the reserved airspace (temporary reserved airspace or its equivalent);
- in accordance with the appropriate ATC clearance, subject to a prescribed and published procedure.

En-route GAT VFR flights above FL 195 will not be permitted. GAT VFR flights above FL 290 shall only be approved within the reserved airspace (temporary or equivalent). Rules applicable to a reserved part of airspace at and above FL 290 are not subject to implementation of the reduced vertical separation minimum of 300 m (1000 FT).
Conduct of VFR flights above FL 290 in the airspace where the vertical separation minimum of 300 m (1000 FT) is applied shall not be approved.

During VFR flights in FIR Sarajevo, radio telephone communication is conducted using standard radio telephone communication using the standard RIT phraseology in English or in one of the official languages in Bosnia and Herzegovina.
Entry into/exit from controlled airspace may be conducted upon approval of the relevant ATC and under its Specified conditions only.
Where traffic loads and airspace situation demand so, the appropriate air traffic control service may, to a space and time-limited extent, completely or partially, prohibit the conduct of VFR flights in controlled airspace.

5.2 VFR Meteo Minimum

VFR flight may be conducted if meteo conditions are the same as or better than:
1. The provision of Class C is shown below:

IFR		VFR
IFR from IFR, IFR from VFR	**Separation**	VFR from IFR
Air Traffic Control Service	**Service provided**	a) ATCS for separation from IFR, b) VFR/VFR traffic information (and traffic avoidance advice on request)
Not applicable	**VMC visibility and distance from cloud minima**	**At and above 10 000 FT:** - 8 KM visibility - 1.500 M horizontal and 300 M vertical distance from cloud **Below 10 000 FT**: - 5 KM visibility - 1.500 M horizontal and 300 M vertical distance from cloud
Not applicable	**Speed limitation**	250 KT IAS below 3050 M (10000 FT AMSL)
Continuous two-way		Continuous two-way
YES	**ATC Clearance**	YES

Note: The height of transition altitude is 10 000 FT AMSL.

2. The provision of Class D is shown below:

IFR		VFR
IFR from IFR	**Separation**	NIL
Air Traffic Control Service, Traffic information about VFR flights (and traffic avoidance advise on request)	**Service provided**	IFR/VFR and VFR/VFR Traffic information (and traffic avoidance advise on request)
Not applicable	**VMC visibility and distance from cloud minima**	**At and above 10 000 FT:** - 8 KM visibility - 1.500 M horizontal and 300 M vertical distance from cloud **Below 10 000 FT:** - 5 KM visibility - 1.500 M horizontal and 300 M vertical distance from cloud
250 KT IAS below 3050 M (10000 FT AMSL)	**Speed limitation**	250 KT IAS below 3050 M (10000 FT AMSL)
Continuous two-way		Continuous two-way
YES	**ATC Clearance**	YES

Note: The height of transition altitude is 10 000 FT AMSL.

3. The provision of Class E is shown below:

IFR		VFR
IFR from IFR	**Separation**	NIL
Air Traffic Control Service and as far as practical, Traffic information about VFR flights	**Service provided**	Traffic information as far as practical
Not applicable	**VMC visibility and distance from cloud minima**	**At and above 10 000 FT:** - 8 KM visibility - 1.500 M horizontal and 300 M vertical distance from cloud **Below 10 000 FT:** - 5 KM visibility - 1.500 M horizontal and 300 M vertical distance from cloud
250 KT IAS below 3050 M (10000 FT AMSL)	**Speed limitation**	250 KT IAS below 3050 M (10000 FT AMSL)
Continuous two-way		NO
YES	**ATC Clearance**	NO

Note: The height of transition altitude is 10 000 FT AMSL.

4. The provision of Class G is shown below:

IFR		VFR
NIL	**Separation**	NIL
NIL	**Service provided**	FIS
NIL	**VMC visibility and distance from cloud minima**	**At and above 10 000 FT:** - 8 KM visibility - 1.500 M horizontal and 300 M vertical distance from cloud **Below 10 000 FT:** - 5 KM visibility - 1.500 M horizontal and 300 M vertical distance from cloud **At and below 3000 FT AMSL or 1000 FT AGL, depending what is higher:** - 1.5 KM visibility - clear of cloud and in sight of ground or water Remark: 800 M for Rotorcraft, Air Ships and Free Balloons. Additionally: Adequate opportunity to observe obstacle on time shall exist.
NIL	**Speed limitation**	250 KT IAS below 3050 M (10000 FT AMSL)
NIL		NO
NO	**ATC Clearance**	NO

Note: The height of transition altitude is 10 000 FT AMSL.

5.3 Special VFR flights (SVFR)

Special VFR Flight is a VFR flight cleared by air traffic control to operate within a control zone in meteorological conditions below VMC.

SVFR flights may be conducted:

- during the hours of daylight - day;
- if flight visibility is at least 1500 m;
- as subject to ATC clearance;
- within CTR;
- within CTR - individually only;
- at a speed adjusted to the meteo conditions.

The relevant ATC shall issue approval to conduct SVFR under the following conditions only:

- if traffic situation permits so;
- if the pilot is trained for such flights;
- if the aircraft is equipped with the appropriate radio and navigation equipment;
- if ground visibility is at least 1500m or more, for helicopters 800 m or more;
- if the ceiling is at least 150 m (500 FT).

When performing special VFR flights, the pilot shall adhere to:

- minimum safe altitude;
- minimum meteo conditions according to class "G" airspace values.

In control zones, special VFR (SVFR) flights are separated from other IFR and SVFR flights according to standards applicable to IFR flight separation.

5.4 Flights above clouds

VFR flights above clouds are permitted if:

- the pilot is trained for such flights;
- the aircraft is equipped with a device for radio communication and pilot is certified to conduct air ground communication;
- the pilot is able to adhere to the intended flight route without entering the clouds;
- the approach to the destination aerodrome and landing in VMC are permitted;
- the height above ground or water is at least 300 m (1000 FT) and the visual flight rules as in airspace class "E" are complied with.;

5.5 Flights at night

"Night flight" is defined as a flight performed in the period from half an hour after sunset (SS+30) to half an hour before sunrise (SR-30).
VFR flights at night are permitted if following conditions have been met:

- pilot has continuous visual reference to ground;
- ceiling at 1500 ft or more, ground visibility at least 8000 m;
- pilot trained for that kind of flight;
- aircraft are appropriately equipped for NVFR;

- aircraft has suitable radio and navigation equipment;
- transponder is used when flying outside CTR;
- radio communication established in class E and G airspace;
- flight plan has been submitted.

Besides the above conditions and restrictions, the following provisions too shall apply to night flights in the aerodrome or airfield zones:

- the aerodrome has to comply with the conditions for night flights;
- runway lights and obstacle lights have to be visible from every part of the aerodrome zone.

5.6 Altimeter setting

Transition Altitude in FIR Sarajevo is 10000 ft.
On VFR flights at and below 10000 FT MSL the pilot shall set the altimeter to the QNH value of the controlled aerodrome nearest to the route of flight.
At a height above 3000 FT (900 m) MSL or 1000 FT (300 m) over obstacles whichever is the higher, all VFR flights In en-route phase are to be carried out at altitude or flight level corresponding to the semicircular rule (Appendix 3).
At 3000 FT and below all VFR flights are to be carried out at altitude freely selected.
On VFR flights within CTR below 10000 FT, the pilot shall set the altimeter to the QNH value of the respective controlled aerodrome.
On VFR flights at uncontrolled aerodrome or airfields, altimeter shall be set in accordance with respective Aerodrome Operating Instructions.
The actual QNH can be obtained from air traffic control units at controlled aerodrome or FIC Banja Luka.

5.7 Other regulated airspace

Restricted and danger areas, and other specially regulated areas, with accurate descriptions, lateral and altitude limits, published in a corresponding aeronautical publication (see NOTAM and AIC). They are active only when notified by NOTAM.

5.8 Flights in Class C and D airspace

VFR flights within these airspace classes may be conducted as required below:

- Aircraft shall be equipped with appropriate radio navigation equipment;
- Pilot shall be trained for such flights;
- Pilot shall contact the relevant ATC unit at least 5 minutes prior to entering Class C or D Airspace;
- Radio-telephone communication shall be provided in the English language or in one of the official languages in Bosnia and Herzegovina;
- Flights shall be conducted in accordance with ATC instructions and clearances only;
- For a VFR flight conducted through several FIRS or sectors, exchange of information between relevant air traffic control units shall be performed at points and as defined in mutual Letter of Agreements.

5.9 Use of aerodromes

For VFR flights, the following are available:

- international aerodromes with organized customs and passport services;
- public airfields for powered aircraft flights and glider flights.

5.10 Flights at Controlled Aerodromes

At controlled aerodromes, ATC clearances are required for taxiing, take-off/landing, entering into traffic circuit, etc. All operations shall be conducted in accordance with ATC instructions and clearances, or Visual Approach/ Departure Charts/Procedures, where existing. For more details regarding VFR Approach/Departure Charts, see AIP BIH AD section.

5.11 Flights at Uncontrolled Aerodromes/Airfields

No ATC is provided at such aerodromes/airfields. They are mostly equipped with an air-ground communication station and can be recognized by the call sign "INFO and name of aerodrome/airfield location" (e.g. INFO PRIJEDOR). A flight manager or another person authorized by a flight organizer shall be responsible for the safe and orderly flow of aerodrome traffic.
Info frequency 123.500 MHz

5.12 Minimum Safe Heights

The following minimum flight altitudes apply to VFR flights:

- over towns, and other densely populated areas and assemblies of persons, at least 300 meters (1000 FT) above the highest obstacle within a 600 m radius from the aircraft position;
- in all other cases at least 150 m (500 FT) above ground or water.

These provisions do not apply to flights for the purposes of emergency medical assistance, search and rescue flights, and special-purpose flights.

5.13 Regulation for Gliders

Glider flights are permitted:

- during the hours of daylight - day;
- in VMC;
- within uncontrolled airspace;
- within controlled airspace.

Glider flights above Transition Altitude, or 10000 FT, shall be approved only if traffic conditions permit so.

5.14 Wave Flying of Gliders

In favorable weather conditions, such flights may be conducted above Class E and G airspace with prior coordination with and approval from relevant ATC. Pilots shall maintain listening watch of a frequency assigned by the relevant ATS and comply with the given instructions.

5.15 Motor-glider Operations

The same rules as for power-driven glider flights apply for motor gliders with running engines.

5.16 Hang- and paraglider activity

The operation of hang- and paraglider is permitted:

- during the hours of daylight - day;
- in VMC;
- outside controlled airspace;
- within Class E Airspace ONLY with a special approval by the Civil Aviation Directorate and acceptance by relevant ATC service.

Take off is permissible everywhere except in densely populated areas and off buildings. The approval of the

landowner is required. Organized flying (5 or more hang or para-gliders) is permitted only from registered take-off places.

5.17 Parachute jumping

Parachute jumping is permitted:

- during the hours of daylight - day;
- in VMC;
- outside controlled airspace;
- within controlled airspace ONLY with the approval of relevant ATC.

For off-field landings an approval of Ministry of Communication and Transport, BHDCA is required. Night parachute jumps will be permitted subject to special conditions.

5.18 Free ballooning

Free ballooning is permitted:

- during the hours of daylight - day;
- in VMC;
- outside controlled airspace;
- within controlled airspace ONLY with the approval of relevant ATC and mandatory ascent announcement at least one hour prior to ascent.

Free ballooning during the night is ONLY permitted with the approval of relevant ATC and ascent announcement.

5.19 Ultra-light Flights

The operation of ultra-light aircraft is permitted:

- during the hours of daylight - day;
- in VMC;
- outside controlled airspace;
- within Class E Airspace ONLY with the approval of relevant ATC.

For flying within controlled airspace class C, D, and E is required:

- with approval from the Ministry of Communication and Transport, BHDCA;
- with approval of relevant ATC.

Ultra-light aircraft shall take off and land at registered airfields only.

5.20 Acrobatic Flights

Acrobatic Flights are permitted:

- during the hours of daylight - day;
- in VMC;
- outside controlled airspace;
- within controlled airspace ONLY with the approval of relevant ATC;

- above 500 m (1700 FT) GND.

Acrobatic flights are not permitted over densely populated areas, fire areas or areas where there is high risk of fire or explosion as well as over open air assemblies of persons.

6. ADDITIONAL REGULATIONS

6.1 Radio and navigation equipment

Compulsory and Recommended Equipment:

Class	C	D	E	G
Radio station	Mandatory	Mandatory	Mandatory	Recommended
VOR	Recommended	Recommended	Recommended	
SSR Transponder	Mandatory	Mandatory	Recommended	
GPS Receiver	Recommended	Recommended	Recommended	Recommended

Note: SSR Transponder within TMA Sarajevo mandatory.

6.2 Radio communication

Aircraft, helicopters, motor gliders, gliders, air ships and free balloons with crew shall for VFR flights be equipped with one VHF transceiver covering at least those frequencies in the frequency range from 1 17.975 MHz to 137.000 MHz which are required to conduct a planned flight, except for flights by day in uncontrolled airspace and at uncontrolled aerodromes and airfields.
Aircraft conducting flights above FL 195 must be equipped with transceivers with a channel spacing capability of 8.33 kHz.
Radio communication is compulsory:

- for flights conducted in Class C and D;
- for flights conducted at night - night flights.

6.3 SSR Transponder

It should have the ability to transmit A and C modes:

- Mode A 2000 ("ICAO countries, SQUAWK 2000 when entering the area of secondary surveillance radar (SSR) from the area without SSR which is used as an uncontrolled IFR fights
- ICAO countries, SQUAWK 7000 - VFR standard SQUAWK when no other code is assigned.

May be mounted onto the SSR Transponder without request unless the appropriate ATC service has specified a different one:

- for flights arriving at/departing from controlled airports;
- for flights entering the Class C and D airspace;
- for VFR flights crossing FIR boundary - international VFR flights;
- for night flights.

The relevant ATC may instruct the pilot to change the ATC code, or to switch off the transponder. This procedure does not apply to VFR flights in the aerodrome traffic circuit. The use of transponder does not imply that VFR flights are radar controlled in class E or G airspace. It is intended to provide traffic information to VFR or IFR flights and flights of military aircraft. In order to announce emergency situation, an aircraft equipped with an SSR transponder shall set the transponder as follows:

- to Mode A 7700 - emergencies;

- to Mode A 7600 - two-way radio communication failure;
- to Mode A 7500 - hijacking.

6.4 GPS receiver

The use of a GPS receiver is recommended.

6.5 ELT (Emergency Locator Transmitter)

An ELT is recommended on board all VFR aircraft. Pilots of aircraft equipped with an Emergency Locator Transmitter are responsible to examine the operational status of the device before each take-off and landing in order to avoid false alerts due to mishandling, pilot negligence or hard landing, shock damage during ground manoeuvring, acrobatic flights, etc. If for some reason, after an emergency landing, the emergency landing location shall be evacuated / abandoned, the passengers must take the ELT with them. The search for people has priority over the search for aircraft.

7. CONTINGENCIES

7.1 Emergencies (7700)

If a pilot is experiencing in-flight difficulties with the aircraft, he must inform the appropriate ATC (FIC, TWR, APP, ACC) of the type of the problem, degree of danger, actions he is undertaking or going to undertake in order to reduce or eliminate the danger, as well as of the type of assistance if possible and necessary. The pilots can use frequency 121.500 MHz

7.2 Radio Failure (7600)

- in case of radio communication failure or unsuccessful radio communication with the relevant ATS, a pilot shall continue with the attempts to establish radio communication by using other ground stations or radio stations of other aircraft, emergency frequency;
- continue blind transmission of all planned activities (change of frequency, etc.);
- for flights where maintaining radio communication is compulsory, set the transponder to Code 7600, provided that it exists on board the aircraft,
- if radio failure occurred before the relevant ATC gave clearance to enter controlled airspace, the aircraft shall bypass the controlled airspace, land at an uncontrolled airport or airfield and inform the ATC thereof.
- if radio failure occurs after entering a controlled airspace, the pilot shall continue flight in accordance with the last received and confirmed clearance from the relevant ATC, and, if this is not possible, leave the controlled airspace via the shortest path, taking into account VFR meteo minima;
- aircraft flying by VFR may enter a controlled airspace only if the pilot has previously been given the ATC clearance, or if circumstances do not allow for landing at an uncontrolled airport (lack of fuel, winter weather conditions, etc.);

8. METEOROLOGICAL INFORMATION FOR VFR FLIGHTS

8.1 General

Meteorological information for VFR Flights is normally supplied upon request by a pilot or its organisation by telephone or as briefing directly in the Meteorological Office or Meteorological Watch Office. Issuance of documentation for flight crew members are provided at Sarajevo, Banja Luka, Mostar and Tuzla International airports during the airports opening hours. For the safety of air traffic, the meteorological service maintains an area meteorological watch and warning service. The service of a continuous weather watch within the FIR and the issuance of appropriate information (SIGMET, AIRMET) are provided by Meteorological Watch Office Banja Luka.

Meteorological information for VFR Flights (General aviation) is provided at the following aerodromes:

Meteorological office	Phone	Fax	E-mail
1	2	3	4
SARAJEVO[1]	+387 33 779 153 +387 63 352 586	+387 33 546 743	sarajevo.met@bhansa.gov.ba
BANJA LUKA[2]	+387 51 337 573 +387 61 260 631 +387 63 353 224	+387 51 337 571	banjaluka.met@bhansa.gov.ba
MOSTAR[1]	+387 36 352 207 +387 61 260 176	+387 36 352 208	mostar.met@bhansa.gov.ba
TUZLA[1]	+387 35 745 746 +387 63 351 665	+387 35 745 532	tuzla.met@bhansa.gov.ba
1.In the opening airport hours 2.H24			

Personal briefing and consultation for flight crew members are provided at Banja Luka (H24) and at Sarajevo during the airports opening hours. Briefing and consultation for flight crew members for Mostar and Tuzla are provided from Banja Luka.

8.2 Meteorological information for flights below FL 150

Meteorological information consists flight documentation and/or briefing and consultation. The pilot shall state category of flight rules (VFR/IFR), destination, route and flying time and altitude. Meteorological flight documentation consists of:

- METAR/SPECI for aerodrome of departure, destination and alternate aerodromes;
- TAF for aerodrome of departure, destination and alternate aerodromes;
- SIGWX charts and upper-wind/temperature charts;
- GAMET (area forecast for low level flights);
- SIGMET and SPECIAL AIREP en route;
- AIRMET en route.

Briefing consists of oral explanation of the actuat and forecasted meteorological conditions for the area/route to be flown, supplemented by available satellite and radar pictures as follows:

- meteorological synopsis;
- surface wind;
- surface visibility;
- upper wind and temperature;
- clouds (amount, type and height);
- weather;
- freezing level
- turbulence;
- icing;
- landing/aerodrome forecast;

Documentation is supplemented by the information about meteorological information and forecast for the aerodrome of departure, arrival and alternative aerodrome.

8.3 Meteorological information in digital form

- eGAFOR

MWO Banja Luka issues eGAFOR forecasts with impact on VFR routes, for low level flights, up to FL 100 for Sarajevo FIR. eGAFOR include forecast following hazardous MET elements: Turbulence, CB distribution, Cloudiness (BKN/OVC), Visibility and Freezing precipitation. eGAFOR products are available at web page www.egafor.eu Validity time of eGAFOR forecasts is 6 hours and it is divided into three 2-hourly intervals.

8.4 VHF VOLMET Broadcast

Name of station	Call Sign/ IDENT (EM)	FREQ	Broadcast period	Hours of service	FIR, Aerodromes included	REP, FCST SIGMET and Remarks
1	**2**	**3**	**4**	**5**	**6**	**7**
BANJA LUKA	VHF VOLMET BROADCAST BANJA LUKA	135.775 MHZ	CONS	H24	SARAJEVO FIR (LQSB)	SIGMET
					BANJA LUKA (LQBK)	METAR, TREND, TAF
					SARAJEVO (LQSA)	METAR, TREND[1], TAF
					MOSTAR (LQMO)	METAR/SPECI, TAF
					TUZLA (LQTZ)	METAR/SPECI, TAF[1]
1.If available						

9. SERVICES FOR VFR FLIGHTS

9.1 ARO Office

ARO provides all documents necessary for flight planning and performs flight plan handling and distribution. Basic documents for pre-flight planning and conduct of VFR flights are:

- Aeronautical Information Publication (AIP)
- AIC
- AIP SUP
- NOTAM
- special regulations

9.2 Flight Information Service

For provision of flight information service within the uncontrolled airspace class "G" of FIR Sarajevo is responsible and accountable Flight Information Center Banja Luka under the conditions and limitations specified in the following table:

Unit	Area	Frequency	Vertical limits	Type of service
FIC Banja Luka	Inside lateral borders of FIR Sarajevo, outside TMAs and CTRs.	135.575 MHz	GND / 9500 FT AMSL	FIS

9.3 Alerting Service, Search and Rescue Service

All Air traffic services units providing services within FIR Sarajevo shall participate in the provision of alerting services for all flights for which a flight plan has been filed or ATC clearance issued or which are otherwise known to ATS. The relevant ATS shall, immediately after having learned that the aircraft is in the state of emergency, alert and assists the Rescue Coordination Centre of Bosnia and Herzegovina (RCC Banja Luka) which shall then declare specific stages of emergency depending on the degree of emergency that the aircraft is experiencing and initiate a SAR as required.

9.4 Air Traffic Control Services

For the provision of air traffic control services in FIR Sarajevo are responsible and accountable:

- aerodrome control (TWR);
- approach control service (APP);
- area control service (ACS).

under the conditions and limitations specified in the following tables:

Table 1: Aerodrome control services

Unit	Area	Frequency	Vertical limits	Type of service
Sarajevo	CTR Sarajevo	118.250 MHz	GND / 6500 FT AMSL	TWR, ADV, ADI
Banja Luka	CTR Banja Luka	133.075 MHz	GND / 5500 FT AMSL	TWR, ADV, ADI
Mostar	CTR Mostar	125.550 MHz	GND / 6500 FT AMSL	TWR, ADV, ADI
Tuzla	CTR Tuzla	132.925 MHz	GND / 5500 FT AMSL	TWR, ADV, ADI

Table 2: Approach control services

Unit	Area	Frequency	Vertical limits	Type of service
Sarajevo	TMA	136.450 MHz	1000 FT AGL / FL 205	APS/RAD
Banja Luka	TMA	133.075 MHz	1000 FT AGL / FL 125	APP
Mostar	TMA	120.225 MHz	1500 FT AGL / FL 145	APP
Tuzla	TMA	120.350 MHz	1500 FT AGL / FL 145	APP

Table 3: Search and Rescue

Unit	Area	Frequency	Vertical limits	Type of service
RCC Banja Luka	FIR Sarajevo			Search and Rescue

9.5 Delegated provision of ATS

Sarajevo FIR covers the airspace over entire Bosnia and Herzegovina territory and territorial waters. Within the airspace of Bosnia and Herzegovina from 9500 FT AMSL to FL 660 the responsibility for ATS provision is delegated to Croatia Control Ltd, ATCC Zagreb in the airspace west of line defined by the following coordinates:

450912N 0170950E - 450804N 0170912E - 450342N 0170647E - 445753N 0170334E - 445013N 0170011E - 444235N 0165729E - 443522N 0165457E - 443254N 0165405E - 441813N 0164859E - 435234N 0164016E - along the border areas of flight information (Zagreb FIR/Sarajevo FIR) - 450912N 0170950E.
(Excluding TMA Banja Luka.)

The airspace is classified as class C.

Within the airspace of Bosnia and Herzegovina from FL 155 to FL 660 the responsibility for ATS provision is delegated to Croatia Control Ltd., ATCC Zagreb south-west of line defined by the following coordinates:

430230N 0173942E - 425336N 0175710E - 424808N 0180750E - 423500N 0183311E -
along the border areas of flight information (Beograd FIR and Sarajevo FIR) -
along the border areas of flight information (Zagreb FIR/Sarajevo FIR) - 430230N 0173942E.

The airspace is classified as class C.

Within the airspace of Bosnia and Herzegovina from 9500 FT AMSL to FL 155 the responsibility for ATS provision is delegated to Croatia Control Ltd., ATCC Zagreb south-west of line defined by the following coordinates:

425336N 0175710E - 424808N 0180750E - 423500N 0183311E -
along the border areas of flight information (FIR Beograd and FIR Sarajevo) -
along the border areas of flight information (FIR Zagreb/FIR Sarajevo) -
425135N 0175134E - 425336N 0175710E.

The airspace is classified as class D.

Within the airspace of Bosnia and Herzegovina from 1500 FT AMSL to FL 155 the responsibility for ATS provision is delegated to Croatia Control Ltd., ATCC Zagreb in the airspace south-west of line defined by the following coordinates:

425758N 0174115E - 425330N 0174728E -
west Along the border areas of flight information (FIR Sarajevo/FIR Zagreb) -
425758N 0174115E.

This airspace is classified as class D.

Within the airspace of Bosnia and Herzegovina from 9500 FT to FL 660 the responsibility for ATS provision is delegated to SMATSA east line defined by the following coordinates:

444114N 0191756E - 443547N 0190618E - 440812N 0191049E - 434624N 0191430E - 433154N 0190840E -
along the border areas of flight information between the Republic of Montenegro and Bosnia and Herzegovina -
433049N 0185523E - 432838N 0184714E - 432055N 0184155E - 430834N 0183329E - 425944N 0182954E -
the border areas of flight information between the Republic of Montenegro and Bosnia and Herzegovina -
423500N 0183311E - horizontally to the border areas of flight information between the Republic of Serbia and Bosnia and Herzegovina.

This airspace is classified as Class C.
Note: Also check Republic of Croatia publications.

10. REPORTING ON THREATS TO AIR TRAFFIC SAFETY AND AIRCRAFT ACCIDENTS

The BH DCA shall be advised of hazardous or potentially hazardous incidents and defects (hereafter referred to as occurrences). Reports shall be made whenever the safety of the aircraft has been compromised (incident and serious incident) or aircraft accident occur the BHDCA immediately, in written form. As exception, aircraft proximity and violation of rules and procedures shall be immediately reported to a relevant ATC Unit. Reports shall be made using the prescribed forms, available in ARO at controlled aerodromes.

11. ABBREVIATIONS AND DEFINITIONS

11.1 Abbreviations

ACC	Area Control Centre or Area Control
ACFT	Aircraft

AD	Aerodrome
ADF	Automatic Direction Finding Equipment
AFIL	Flight Plan Filed in the Air
AFTN	Aeronautical fixed telecommunication network
AGL	Above Ground Level
AIC	Aeronautical Information Circular
AIP	Aeronautical Information Publication
AIS	Aeronautical Information Services
AMSL	Above Mean Sea Level
APP	Approach Control Office, Approach Control or Approach Control Service
ARO	Air Traffic Services Reporting Office
ATC	Air Traffic Services
CB	Cumulonimbus
CTA	Control Area
CTR	Control Zone
EET	Estimated Elapsed Time
ELT	Emergency Locator Transmitter
ENR	En-route
EOBT	Estimated off-block Time
FIC	Flight Information Centre
FIR	Flight Information Region
FIS	Flight Information Service
FL	Flight Level
FPL	Filed Flight Plan
GAC	General Aviation Centre
GAFOR	Forecast for General Aviation
GND	Ground
GPS	Global Positioning System
HPA	Hectopascal
ICAO	International Civil Aviation Organtzation
IAS	Indicated Air Speed
IFR	Instrument Flight Rules
INFO	Information
MWTOW	Maximum Take Off Wight
MSL	Mean Sea Level
NAV	Navigation
NM	Nautical Miles
NOTAM	Notice to Airman

NVFR	Night Visual Flight Rules
OPR	Operator
PIC	Pilot in Command
POB	Persons on Board
RWY	Runwav
SIGMET	Significant Meteorological Information
SR	Sunrise
SS	Sunset
SSR	Secondary Surveillance Radar
SVFR	Special Visual Flight Rules
SUP	AIP Supplement
TMA	Terminal Control Area
TWR	Aerodrome Control Tower or Aerodrome Control
UTC	Co-ordinated Universal Time
VFR	Visual Flight Rules
VMC	Visual Meteorological Conditions
VOLMET	Meteorological Information for Aircraft in Flight
VOR	VHF omni directional radio range

11.2 Definitions

When the following terms are used in the International Standards for Rules of the Air, they have the following meanings:

Acrobatic flight. Manoeuvres intentionally performed by an aircraft involving an abrupt change in its altitude, an abnormal attitude, or an abnormal variation in speed.

Advisory airspace. An airspace of defined dimensions, or designated route, within which air traffic advisory service is available

Advisory route. A designated route along which air traffic advisory service is available.

Aerodrome. A defined area on land or water (including any buildings, installations and equipment) intended to be used either wholly or in part for the arrival, departure and surface movement of aircraft.

Aerodrome control service. Air traffic control service for aerodrome traffic.

Aerodrome control tower. A unit established to provide air traffic control service to aerodrome traffic.

Aerodrome traffic. All traffic on the manoeuvring area of an aerodrome and all aircraft flying in the vicinity of an aerodrome.

Aerodrome traffic zone. An airspace of defined dimensions established around an aerodrome for the protection of aerodrome traffic.

Aeronautical Information (AIP). A publication issued by or with the authority of a State and containing aeronautical information of a lasting character essential to air navigation.

Aircraft. Any machine that can derive support in the atmosphere from the reactions of the other than the reactions of the air against the earth's surface.

Air traffic. All aircraft in flight or operating on the manoeuvring area of an aerodrome.

Air traffic control clearance. Authorization for an aircraft to proceed under conditions specified by an air

traffic control unit.

Air traffic control service. A service provided for the purpose of:

- preventing collisions between aircraft, and on the manoeuvring area between aircraft and obstructions, and
- expediting and maintaining an orderly flow of air traffic.

Air traffic control unit. A generic term meaning variously, area control centre, approach control unit or aerodrome control tower.

Air traffic service. A generic term meaning variously, flight information service, alerting service, air traffic advisory service, air traffic control service (area control service, approach control service or aerodrome control service).

Air traffic sevices reporting office. A unit established for the purpose of receiving reports concerning air traffic services and flight plans submitted before departure.

Air traffic services unit. A generic term meaning variously, air traffic control unit. flight information centre or air traffic services reporting office.

Airway. A control area or portion thereof established in the form of a corridor.

Alerting service. A service provided to notify appropriate organizations regarding aircraft in need of search and rescue aid, and assist such organizations as required.

Alternate aerodrome. An aerodrome to which an aircraft may proceed when it becomes either impossible or inadvisable to proceed to or to land at the aerodrome of intended landing.

Altitude. The vertical distance of a level, a point or an object considered as a point, measured from mean sea level (MSL).

Approach control service. Air traffic control service for arriving or departing controlled flights.

Apron. A defined area, on a land aerodrome, intended to accommodate aircraft for purposes of loading or unloading passengers, mail or cargo, fuelling, parking or maintenance.

Area control centre. A unit established to provide air traffic control service to controlled flights in control areas under its jurisdiction.

ATS route. A specified route designed for channelling the flow of traffic as necessary for the provision of air traffic service.

Ceiling. The height above the ground or water of the base of the lowest layer of cloud below 6000 meters (20000 FT) covering more than half the sky.

Control area. A controlled airspace extending upwards from a specified limit above the earth.

Controlled aerodrome. An aerodrome at which air traffic control service is provided to aerodrome traffic.

Controlled airspace. An airspace of defined dimensions within which air traffic control service is provided in accordance with the airspace classification.

Controlled flight. Any flight which is subject to an air traffic control clearance.

Controlled zone. A controlled airspace extending upwards from the surface of the earth to a specified upper limit.

Cruising level. A level maintained during significant portion of flight.

Danger area. An airspace of defined dimensions within which activities dangerous to the flight of aircraft may exist at a specified time.

Estimated time of arrival. For IFR flights, the time at which it is estimated that the aircraft will arrive over that designated point, defined by reference to navigation aids, from which it is intended that an instrument approach procedure will be commenced, or, if no navigation aid is associated with the aerodrome, the time at which the aircraft will arrive over the aerodrome. For VFR flights, the time at which it is estimated that the aircraft will arrive over the aerodrome.

Expected approach time. The time at which ATC expects that an arriving aircraft, following a delay, will leave the holding fix to complete its approach for landing.

Flight information centre. A unit established to provide flight information service and alerting service.

Flight information region. An airspace of defined dimensions within which flight information service and alerting service is provided.

Flight information service. A service provided for the purpose of giving advice and information useful for the safe and efficient conduct of flights.

Flight level. A surface of constant atmospheric pressure which is related to a specific pressure datum, 101312 hectopascal (hPa), and is separated from other such surfaces by specific pressure intervals.

Flight plan. Specified information provided to air traffic services units, relative to an intended flight or portion of a flight of an aircraft.

Flight visibility. The visibility forward from the cockpit of an aircraft in flight.

Ground visibility. The visibility at an aerodrome, as reported by an accredited observer or by automatic systems.

Heading. The direction in which the longitudinal axis of an aircraft is pointed, usually expressed in degrees from North (true, magnetic, compass or grid).

Height. The vertical distance of a level, a point or an object considered as a point, measured from specified datum.

IFR. The symbol used to designate the instrument flight rules.

IFR flight. A flight conducted in accordance with the instrument flight rules.

IMC. The symbol used to designate instrument meteorological conditions.

Instrument flight procedure. A series of predetermined manoeuvres by reference to flight instruments with specified protection from obstacles from the initial approach fix, or where applicable, from the beginning of a defined arrival route to a point from which a landing can be completed and thereafter, if a landing is not completed, to a position at which holding or en-route obstacle clearance criteria apply.

Instrument meteorological conditions. Meteorological conditions expressed in terms of visibility, distance from cloud, and ceiling, less than the minima specified for visual meteorological conditions.

Level. A generic term relating to the vertical position of an aircraft in flight and meaning variously, height, altitude or flight level.

Manoeuvring area. That part of an aerodrome to be used for the take-off, landing and taxiing of aircraft, excluding aprons.

Pilot-in-command. The pilot designated by the operator, or in a case of general aviation, the owner, as being in command and charged with the safe conduct of a flight.

Prohibited area. An airspace of defined dimensions, above the land areas or territorial waters of a State, within which the flight of aircraft is prohibited.

Reporting point. A specified geographical location in relation to which the position of an aircraft can be reported.

Restricted area. An airspace of defined dimensions, above the land areas or territorial waters of a State, within which the flight of aircraft is restricted in accordance with certain specified conditions.

Runway. A defined rectangular area on a land aerodrome prepared for the landing and take-off of

aircraft.

Runway-holding position. A designated position intended to protect a runway, an obstacle limitation surface, or an ILS/MLS critical/sensitive area at which taxiing aircraft and vehicles shall stop and hold, unless otherwise authorized by the aerodrome control tower.

Special VFR flight. A VFR flight cleared by air traffic control to operate within a control zone in meteorological conditions below VMC.

Taxiing. Movement of an aircraft on the surface of an aerodrome under its own power, excluding take-off and landing.

Taxiway. A defined path on a land aerodrome established for the taxiing of aircraft and intended to provide a link between one part of the aerodrome an another.

Terminal control area. A control area normally established at the confluence of ATS routes in the vicinity of one or more major aerodromes.

Track. The projection on the earth's surface of the path of an aircraft, the direction of which path at any point is usually expressed in degrees from North (true, magnetic or grid).

Traffic information. Information issued by an air traffic services unit to alert a pilot to other known or observed air traffic which may be in proximity to the position or intended route of flight and to help the pilot to avoid a collision.

Transition altitude. The altitude at or below which the vertical position of an aircraft is controlled by reference to altitudes

Unmanned free balloon. A non-power-driven, unmanned, lighter-than-air aircraft in free flight.

VFR. The symbol used to designate the visual flight rules.

VFR flight. A flight conducted in accordance with the visual flight rules.

Visibility. Visibility for aeronautical purposes is the greater of:

- the greatest distance at which a black object of suitable dimensions, situated near the ground, can be seen and recognized when observed against a bright background;
- the greatest distance at which lights in the vicinity of 1000 candelas can be seen and identified against an unlit background.

Visual meteorological conditions. Meteorological conditions expressed in terms of visibility, distance from cloud, and ceiling, equal to or better than specified minima.

APPENDIX 1 - AIRSPACE CLASSES - SERVICE PROVIDED AND FLIGHT REQUIREMENTS

Class	Type of flight	Separation provided	Services provided	Speed limitation	Radio communication requirement	Subject to an ATC clearance
A	IFR only	All aircraft	Air traffic control service	Not applicable	Continuous two-way	Yes
B	IFR	All aircraft	Air traffic control service	Not applicable	Continuous two-way	Yes
	VFR	All aircraft	Air traffic control service	Not applicable	Continuous two-way	Yes
C	IFR	IFR from IFR IFR from VFR	Air traffic control service	Not applicable	Continuous two-way	Yes
	VFR	VFR from IFR	Air traffic control service for separation from IFR; VFR/VFR traffic information (and traffic avoidance advice on request)	250 kt IAS below 3 050 m (10 000 it) AMSL	Continuous two-way	Yes
D	IFR	IFR from IFR	Air traffic control service; Traffic information about VFR flights (and traffic avoidance advice on request)	250 kt IAS below 3 050 m (10 000 ft) AMSL	Continuous two-way	Yes
	VFR	NIL	IFR/VFR and VFR/VFR traffic information (and traffic avoidance advice on request)	250 kt IAS below 3 050 m (10 000 ft) AMSL	Continuous two-way	Yes
E	IFR	IFR from IFR	Air traffic control service and, as far as practical, traffic information about VFR flights	250 kt IAS below 3 050 m (10 000 ft) AMSL	Continuous two-way	Yes
	VFR	NIL	Traffic information as far as practical	250 kt IAS below 3 050 m (10 000 ft) AMSL	No	No
F	IFR	IFR from IFR as far as practical	Air traffic advisory service; flight information service	250 kt IAS below 3 050 m (10 000 ft) AMSL	Continuous two-way	No
	VFR	NIL	Flight information service	250 kt IAS below 3 050 m (10 000 ft) AMSL	No	No
G	IFR	NIL	Flight information service	250 kt IAS below 3 050 m (10 000 ft) AMSL	Continuous two-way	No
	VFR	NIL	Flight information service	250 kt IAS below 3 050 m (10 000 ft) AMSL	No	No
When the height of the transition altitude is lower than 3 050 m (10 000 ft) AMSL, FL 100 should be used in lieu of 10 000 ft						

APPENDIX 2 - ICAO AIRSPACE CLASSIFICATION WITHIN SARAJEVO

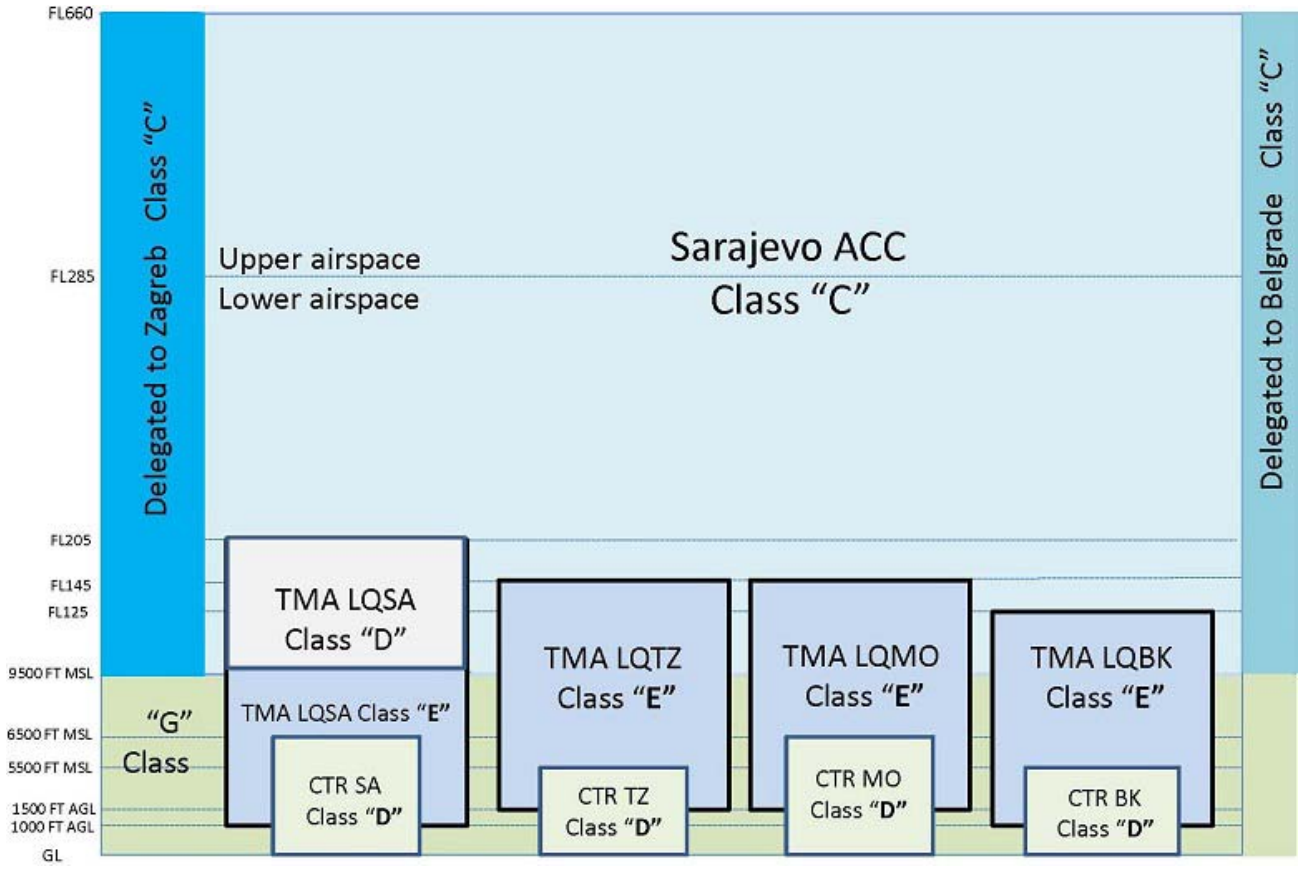

APPENDIX 3 - TABLES OF CRUISING LEVELS

TRACK **											
From 000 degrees to 179 degrees***						From 180 degrees to 359 degrees***					
IFR Flights			VFR Flights			IFR Flights			VFR Flights		
Level			Level			Level			Level		
FL	Feet	Metres	FL	Feet	Metres	FL	Feet	Metres	FL	Feet	Metres
010	1000	300				020	2000	600			
030	3000	900	035	3500	1050	040	4000	1200	045	4500	1350
050	5000	1500	055	5500	1700	060	6000	1850	065	6500	2000
070	7000	2150	075	7500	2300	080	8000	2450	085	8500	2600
090	9000	2750	095	9500	2900	100	10000	3050	105	10500	3200
110	11000	3350	115	11500	3500	120	12000	3650	125	12500	3800
130	13000	3950	135	13500	4100	140	14000	4250	145	14500	4400
150	15000	4550	155	15500	4700	160	16000	4900	165	16500	5050
170	17000	5200	175	17500	5350	180	18000	5500	185	18500	5650
190	19000	5800	195	19500	5950	200	20000	6100	205	20500	6250
210	21000	6400	215	21500	6550	220	22000	6700	225	22500	6850
230	23000	7000	235	23500	7150	240	24000	7300	245	24500	7450
250	25000	7600	255	25500	7750	260	26000	7900	265	26500	8100
270	27000	8250	275	27500	8400	280	28000	8550	285	28500	8700
290	29000	8850				300	30000	9150			
310	31000	9450				320	32000	9750			
330	33000	10050				340	34000	10350			
350	35000	10650				360	36000	10950			
370	37000	11300				380	38000	11600			
390	39000	11900				400	40000	12200			
410	41000	12500				430	43000	13100			
450	45000	13700				470	47000	14350			
490	49000	14950				510	51000	15550			
etc.	etc.	etc.				etc.	etc.	etc.			

* Except when, on the basis of regional air navigation agreements, a modified table of cruising levels based on a nominal vertical separation minimum of 1 000 ft (300 m) is prescribed for use, under specified conditions- by aircraft operating above FL 410 within designated portions of the airspace.

** Magnetic track or m polar areas at latitudes higher than 70 degrees and within such extensions to those areas as may be prescribed by the appropriate ATS authorities. grid tracks as determined by a network of lines parallel to the Greenwich Meridian superimposed on a polar stereographic chart in which the direction towards the North Pole is employed as the Grid North.

*** Except where, on the basis of regional air navigation agreements, from 090 to 269 degrees and from 270 to 089 degrees is prescribed to accommodate predominant traffic directions and appropriate transition procedures to be associated therewith are specified

Note.- Guidance material relating to vertical separation is contained in the Manual on Implementation of a 300 m (1 000 ft) Vertical Separation Minimum Between FL 290 and FL 410 Inclusive (Doc 9574).

APPENDIX 4 - VMC VISIBILITY AND DISTANCE FROM CLOUD MINIMA

Airspace classes C,D and E

Altitude band	Flight visibility	Distance from cloud
10000 FT(3050m) Below 10000 FT (3050 m)	8 km 5 km	1500 m horizontally 300 m (1000 FT) vertically

Airspace class G

Altitude band	Flight visibility	Distance from cloud
10000 FT(3050m) Below 10000 FT (3050 m)	8 km 5 km	1500 m horizontally and 300 m (1000 FT) vertically
At or below 3000 FT AMSL or 1000 FT above terrain, whichever is higher	1,5 km for aircraft 800 m for helicopters, airship and unnamed free balloon at speed, in the prevailing visibility, will give opportunity to observe other traffic or any obstacles in time to avoid collision	Clear of cloud and with the surface in sight

This AIC replaces AIC A 002/2014 26 JUN 2014.